
WAYMAKER
WAYMAKER TECHNOLOGIES CORPORATION
" PIONEERING WATER TREATMENT SOLUTIONS PROVIDER "
www.waymakertechnologies.net

TABLE OF CONTENTS

About Us	3
Mission, Vission & Core Values	4
Products and Services	6
Projects Completed	7
Client Acceptance Test	26
Company Events	27
Other Products	29
Certificates	35


MAKER
OGIES CORPORATION
T SPECIALIST

ABOUT US



Waymaker Technologies Corporation, established in 2022, is a leading provider of **innovative water treatment technologies** based in *Angeles City, Pampanga, Philippines.*



We specialize in delivering a diverse range of **high-quality, safe, and reliable water treatment solutions** tailored to meet the unique requirements of our clients across the Philippines and the Asia-Pacific (APAC) region. Known for our commitment to excellence, our products are trusted locally and internationally, reflecting our dedication to advancing water treatment technology.



VISION

“To be the leading world class water treatment technology solutions provider in the Philippines and within Asia Pacific, setting the standard for excellence, quality, and integrity”

MISSION

"At Waymaker Technologies Corp our mission is to provide innovative, sustainable, and world-class water treatment solutions that exceed customer expectations.

We are committed to relentlessly pursue excellence in all aspects of our work, from product development to customer service. We continuously strive for improvement and aim to be at the forefront of technological advancements in water treatment.
Our commitment to customer satisfaction drives us to deliver exceptional value and service.”

OUR CORE VALUES

1. **Excellence** - We have unwavering dedication to achieving the highest standards of quality, performance, and organizational growth

2. **Quality** - We maintain the highest standards of quality in every product and service we offer. Our rigorous quality control processes ensure that our solutions meet or exceed industry regulations and customer requirements.

3. **Integrity** - We conduct our business with the utmost integrity and honesty, upholding ethical principles in all our interactions. We build trust with our customers, partners, and employees through transparency and fairness.

4. **Customer-Centric Approach** - We prioritize our customers' needs and work closely with them to provide tailored solutions that address their unique challenges.

5. **Employee Empowerment** - We empower our employees to excel in their roles, fostering a culture of innovation and continuous learning. We recognize that our team's expertise and dedication are essential to our success.

6. **Social Impact** - We recognize our responsibility to contribute positively to society. We actively engage in initiatives that improve access to clean and safe water and support efforts to address global water challenges.

7. **Creativity** - Creativity is the driving force behind continuous improvement. We encourage our team members to think critically about their work, seek ways to enhance processes, and explore new horizons. Through this, we maintain our commitment to excellence.

By adhering to these core values and principles, we aim to fulfill our vision of being the foremost provider of water treatment solutions in the region.


DEW
DEW

WAYMAKER

PRODUCTS & SERVICES

We provide the following services:

- Gaseous Treatment
  Odor Control / Wet Scrubbing / Biogas Desulfurization
- Waste Water
  Recycled water / Package STP
- Water Treatment
  Packaged potable system / Seawater Desal / ION Exchange demin water

We are highly specialised particularly in providing:



PLANT PROCESS ENGINEERING DESIGN



FABRICATION & ASSEMBLY



ELECTRICAL & INSTRUMENTATION DESIGN



SERVICING & MAINTENANCE



TOTAL WATER MANAGEMENT SERVICES

PROJECTS COMPLETED

WATER TREATEMENT FOR MANUFACTURING INDUSTRY



Project : **Water Treatment for Manufacturing of Hypodermic Needles**
Client: Beckton Dickinson (M) SDN BHD
Location: Penang, Malaysia



Project : **Reverse Osmosis Water Treatment System**
Client: SSMC
Location: Singapore

WATER TREATEMENT FOR MANUFACTURING INDUSTRY



Project : **Re-use Water Treatment for Ornamental Plant Nursery**
Client: 800 Landscape PTE LTD
Location: Singapore



Project : **Waste Water Treatment for EV battery manufacturing**
Client: JIOS Aerogel
Location: Singapore

WAYMAKER

PROJECTS COMPLETED

LAUNDRY WASTE WATER TREATMENT SYSTEM



Client: Iwash Laundry
Location: Singapore

SINGAPORE'S LARGEST LAUNDRY WATER RECYCLING FACILITY.



PROJECTS COMPLETED



STERILE WATER TREATMENT

In industries like pharmaceuticals, biotechnology, and healthcare, even the slightest impurities or microorganisms in water can compromise product integrity and jeopardize patient safety. Ensuring a consistent supply of sterile, contaminant-free water is essential—and a significant challenge. Our ***Sterile Water Treatment System*** *is the answer, delivering water that meets the highest purity standards, including* ***ISO 13959*** *and* ***AS 5369****, for the most demanding applications.*







Client: Fiona Stanley Hospital
Location: Australia

6TH LARGEST HOSPITAL IN AUSTRALIA – 783 BEDS

PROJECTS COMPLETED



Project : **Sterile Water Treatment**
Client: Bunbury General Hospital
Location: Perth, Australia



Project : **Sterile Water Treatment**
Client: St. John Subiaco Hospital
Location: Australia

PROJECTS COMPLETED



Project : **De-ionized Water for Ultra Pure Water applications**
Client: Thinknologies
Location: Singapore









Project : **Potable Water Treatment System**
Client: Total Oil and Gas
Location: Papua New Guinea

PROJECTS COMPLETED







INSTALLATION OF WATER HARDNESS SENSOR

*We successfully installed a **CA Hardness Sensor** for the Water Softener System at one of the **leading semiconductor companies in Clark (Texas Instruments).** This sensor enables real-time monitoring of residual hardness, ensuring optimal regeneration and protecting critical processes that require high-purity water.*

PROJECTS COMPLETED



> **SAFE WATER ANYWHERE, ANYTIME**

EMERGENCY MOBILE WATER TREATMENT

*In times of disaster or in remote areas where clean water is scare, our **Emergency Mobile Water Treatment System** provides an immediate solution to this pressing problem. Our advanced system produces 6,000 gallons per day of safe, potable water, designed to operate in the toughest conditions.*

PROJECTS COMPLETED



EMERGENCY MOBILE WATER TREATMENT

PROJECTS COMPLETED



*At **one of Clark's premier hotels**, our **Water Softener System** plays a vital role in ensuring consistent water quality for premium guest experiences. Designed to remove hardness-causing minerals like calcium and magnesium, this advanced system helps protect plumbing fixtures, prolong equipment lifespan, and deliver softer water for laundry, kitchen, and housekeeping operations. Engineered for efficiency and reliability, our solution reflects the hotel's commitment to excellence, comfort, and operational sustainability.*

WATER SOFTENER SYSTEM

PROJECTS COMPLETED



*Our Water Softener System at one of **Angeles' leading hotels (Best Western Plus Metroclark)** ensures consistent, high-quality water for an exceptional guest experience. By removing hardness-causing minerals, it protects plumbing and equipment while providing softer water for daily operations—supporting comfort, efficiency, and sustainability.*





WATER SOFTENER SYSTEM

PROJECTS COMPLETED



WATER TREATMENT PLANT

*We successfully fabricated a Water Treatment Plant one of the **leading feed mill company** in the Philippines. This water treatment plant will help our client's production which meets their water operational requirements.*





PROJECTS COMPLETED





Project : **Streamguard Semi-Auto Backwash Filter**
Client: Clark Marriott Hotel
Location: Clark, Pampanga





Project : **Streamguard Semi-Auto Backwash Filter**
Client: NGCB
Location: Mabalacat City, Pampanga

PROJECTS
COMPLETED







Project : **Sand Separator & Streamguard Auto-Backwash Filter**
Client: Linde Plant
Location: Apalit, Pampanga

PROJECTS COMPLETED

MMF AND SOFTENER REHABILITATION





Client: Mindoro Harvest Energy Co., Inc.
Location: Mindoro







Client: RDF Feed, Livestock & Foods Inc.
Location: Porac, Pampanga

PROJECTS COMPLETED

REVERSE OSMOSIS (RO) REHABILITATION







Project : **Retrofitting of Train 1 and Train 2 RO**
Client: AirLiquide Philippines
Location: Laguna

PROJECTS COMPLETED









Client: Hann Philippines,Inc
Location: Pampanga

WATER SOFTENER SYSTEM

PROJECTS
COMPLETED





DOMESTIC
WATER TREATMENT PLANT

WAYMAKER

PROJECTS COMPLETED





Client: Monde Nissin Corporation
Location: Pampanga



*We successfully installed an **Iron and manganese removal** Water Treatment Plant. This water treatment plant will help our client's domestic water to remove rusty residue and smell from water.*



PROJECTS
COMPLETED







Client: National University Singapore
Location: Singapore

STERILE WATER TREATMENT PLANT

PROJECTS COMPLETED







EMERGENCY MOBILE WATER TREATMENT

PROJECTS COMPLETED

Sterile Water Treatment





Control Panels



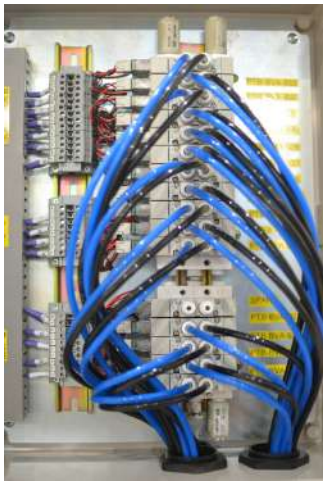

Piping





PROJECTS COMPLETED

Filter Tanks



Storage Tanks



Heater Skids



Water Filtration Skids



Chemical Dosing Tanks



Chemical StorageTanks




WAVE CYBER
DANGER

CLIENT
ACCEPTANCE TEST







COMPANY **EVENTS**














WAYMAKER
WAYMAKER TECHNOLOGIES CORPORATION
WAYMAKER
WAYMAKER TECHNOLOGIES CORPORATION
WATER TREATMENT SPECIALIST

StreamGuard™

SIDE STREAM FILTER SYSTEM

Engineered for continuous side stream filtration, StreamGuard keeps your water crystal-clear, protects equipment from scaling and fouling, and extends system life — all while reducing downtime and maintenance costs.

Areas of Application:
Cooling Towers, Data Centres, Heat Exchanger, Evaporative Condensers



Equipment Model	Water Flow Rate
2x2inch ATD	20-30 m^3/hr
2x3inch ATD	30-45 m^3/hr
3x3inch ATD	40-60 m^3/hr
4x3inch ATD	50-80 m^3/hr
5x3inch ATD	60-100 m^3/hr

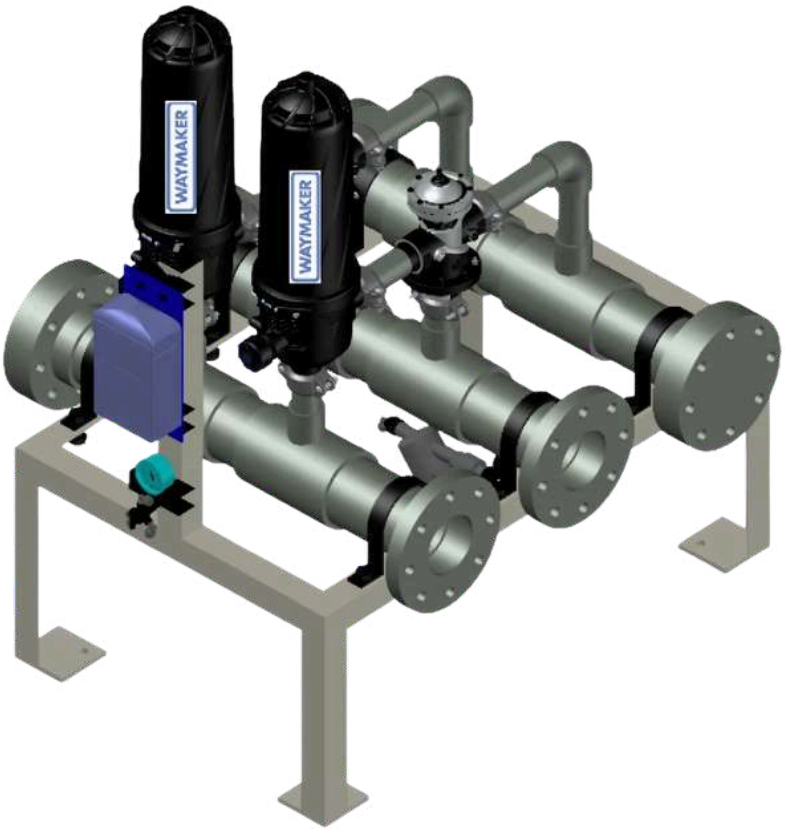

YOUR SYSTEM'S FIRST LINE OF DEFENSE.

SYSTEM FEATURES:

- Continuous clean water output; filters 50–130 µm with auto backwash
- Low water/energy use; self-cleans at <2 bar pressure
- Automated controller with minimal power draw
- Dual filtration: centrifugal + media (surface/in-depth)
- Modular, plug-and-play, corrosion-resistant thermoplastics
- No media replacement required
- Heavy Duty
- Uses just 10 L per 6–8 sec flush—up to 99% less water than MMF

StreamGuard™

FILTER OPERATION PRESSURE

Maximum working pressure	10 Bar (145 psi)
Minimum backwash pressure	2.0 Bar (29 psi)
Minimum backwash flow rate	10 m3/hr (36 GPM)
Maximum working temperature	60°C (140°F)
Maximum feed water Total Suspended Solids	100 ppm
pH Range	3-12
Back-Flush Water Volume	12-22 (L) per single filter

MATERIAL OF CONSTRUCTION

Filter Housing & Lid	Polyamide, Polypropylene
Disc Elements	Polyamide, Polypropylene
Backwash Valves	Polyamide, Polypropylene
Manifolds	HDPE
Seals	NBR
Control Tubing	PE or PA

SYSTEM BENEFITS

- Reduce energy consumption
- Higher Concentration Cycles
- Reduced Pathogen Development
- Reduced Operational Costs
- Higher Productivity
- Prolongs Lifespan of Equipment
- Reduces Chemical Usage

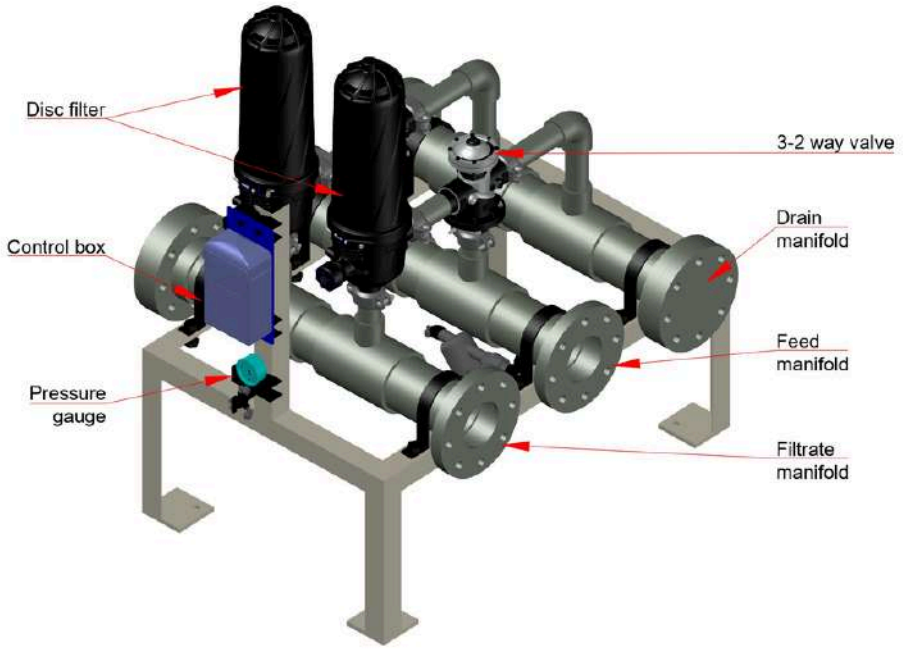

LUMINOR
ULTRAVIOLET PRODUCTS

Blackcomb 4.1



Blackcomb 5.1



Blackcomb 6.1



LUMINOR BLACKCOMB

BLACKCOMB SERIES

UV water treatment systems for the whole home

LUMINOR RAINIER

RAINER SERIES

UV water treatment systems for Light Commercial

Rainer 5.0



Rainer 6.0



Everest 6.0



LUMINOR EVEREST

EVEREST 6.0

UV water treatment systems for Industrial and Municipal

WAYMAKER

DISC & SCREEN FILTRATION PRODUCTS

AUTOMATIC DISC FILTERS



″ATD & 3″ATDL – Automatic Angle models



3″ AHDL – Automatic Twin long



3″ AHD – Automatic Twin short

MANUAL FILTERS



Manual Twin Disc Filter



Manual Y Disc Filter



Manual T Disc Filter



sand Separators

ACTIVATED CARBON PRODUCTS



MESH 4X8



MESH 6X12



MESH 8X30



MESH 12X30



MESH below 325

TECHNICAL DATA SHEET		
PRODUCT	Coal Based Granular Activated Carbon	Coconut Based Granular Activated Carbon
TEST METHOD	ASTM, unless otherwise stated	
MODEL	Pureo K85 8 x 30	Pureo C-100 8 x 30
Size	8 x 30	8 x 30
Iodine Adsorption	Min. 850 mg/g	Mg/gm 1000 Min
Moisture Content	Max. 5 %	Max. 5 %
Particle Size Distribution	Min. 92 %	Min. 92 %
Ash	Max. 15 %	Max. 3 %
Bulk Density	0.45 - 0.55 g/ml	g/ml 0.51 - 0.55 Min
Hardness	-	Min. 98 %
Note	For health and safety related aspects please refer to the Material Safety DataSheet (MSDS), which is available on request.	

WATER MEMBRANE PRODUCTS



Pure Water Spiral Wound Membranes



Industrial Process Water Membranes



Sanitary, Food & Beverage Membranes



Nanofiltration (NF) Membranes

TECHNICAL DATA SHEET					
Performance Priority for end-user	**Common Applications**	**Flow (GPD)**	**Typical Rejection**	**Min. Rejection**	**Membrane Model**
Highest rejection of salts	High pressure boiler feed, High purity water	11,000	99.8	99.65	AG-400 H / 3150329
Highest rejection of salts	High pressure boiler feed, High purity water	12,000	99.8	99.65	AG-440 H / 3150328
Low energy consumption	2nd pass RO, Drinking water	11,000	99.65	99.5	AK-400 H / 3150326
Low energy consumption	2nd pass RO, Drinking water	12,000	99.65	99.5	AK-440 H / 3150327
Low energy consumption	Drinking water	10,000	99.5	99.0	AG-400 LE H / 3187569
Low energy consumption	Drinking water	11,000	99.5	99.0	AG-440 LE H / 3187650
Fouling resistance to challenging feed water	Wastewater applications requiring high TDS removal	11,000	99.8	99.5	AG-400 FR H / 3187651

ELFI SELF-CLEANING **PRODUCTS**













APPLICATIONS

- STEEL, PAPER, TEXTILE INDUSTRIES
- ACQUACULTURE
- COOLING WATER
- GROUNDWATER / GEOTHERMAL
- PUMPS
- OSMOSIS PLANT PROTECTION
- UF/NF PLANT PROTECTION
- WATER TREATMENT
- DRINKING WATER
- DAIRY
- BEVERAGE
- BREWERY
- OLIVE OIL INDUSTRY

WHY WAYMAKER?



LET'S BUILD A SUSTAINABLE FUTURE TOGETHER

WHY US?

Waymaker Technologies Corporation stands out as a leading provider of water treatment technology in the Asia Pacific region. Here's why partnering with us is the right choice:

1. **Proven Expertise Across Borders**-With a strong track record of delivering water treatment systems and services to clients in the Philippines, Singapore, Malaysia, Papua New Guinea, and Australia, our experience and reliability speak for themselves.
2. **Serving Diverse Industries**-We cater to a wide range of sectors, including Medical, Pharmaceutical, Semiconductor, Food & Beverage, and more. Our systems are designed to meet the specific needs of each industry, ensuring tailored solutions for our clients.
3. **Local Strength, Global Quality**- Our factory in Angeles City, Pampanga, enables us to provide quick and direct support to our local clients. By building and testing all our equipment locally, we not only ensure high-quality standards but also contribute to the development of the local economy and workforce.
4. **Commitment to Innovation and Sustainability**- We are known for delivering innovative, sustainable, and world-class water treatment systems. Our solutions are designed to address today's challenges while promoting a greener future.
5. **Customer-Centric Approach**-Our dedication to excellence drives us to deliver exceptional value and service. This commitment is validated by our extensive track record of satisfied clients and successful projects.

Choosing Waymaker Technologies Corporation means choosing a partner dedicated to providing top-tier solutions, unmatched service, and a shared commitment to success.

SEC CERTIFICATE

REPUBLIC OF THE PHILIPPINES
SECURITIES AND EXCHANGE COMMISSION
2F Legislative Bldg. Tarlac City

COMPANY REG. NO.: 2022040048932-03

CERTIFICATE OF INCORPORATION

KNOW ALL PERSONS BY THESE PRESENTS:

This is to certify that the Articles of Incorporation and By Laws of:

WAYMAKER TECHNOLOGIES CORPORATION

were duly approved by the Commission on this date upon the issuance of this Certificate of Incorporation in accordance with the Revised Corporation Code of the Philippines (Republic Act No. 11232), which took effect on February 23, 2019 and the Foreign Investments Act of 1991 (Republic Act No. 7042, as amended), approved on June 13, 1991, and copies of said Articles of Incorporation and By Laws are hereto attached.

This Certificate grants juridical personality to the corporation but does not authorize it to issue, sell or offer for sale to the public, securities such as but not limited to, shares of stock, investment contracts, debt instruments and virtual currencies without prior Registration Statement approved by the Securities and Exchange Commission; nor to undertake business activities requiring a Secondary License from this Commission such as, but not limited to acting as: broker or dealer in securities, government securities eligible dealer (GSED), investment adviser of an investment company, close-end or open-end investment company, investment house, transfer agent, commodity/financial futures exchange/broker/merchant, financing/lending company, and time shares/club shares/membership certificate issuers or selling agents thereof; nor to operate a fiat money to virtual currency exchange. Neither does this Certificate constitute a permit to undertake activities for which other government agencies require a license or permit.

This Certificate **DOES NOT AUTHORIZE INVESTMENT SOLICITATION AND INVESTMENT-TAKING WITHOUT A SECONDARY LICENSE FROM THIS COMMISSION.**

As a registered corporation, it shall submit annually to this Commission the reports indicated at the back of this certificate.

IN WITNESS WHEREOF, I have hereunto set my hand and caused the seal of this Commission to be affixed to this Certificate at 2F Legislative Bldg. Tarlac City, Philippines, this day of 08 April Two Thousand Twenty Two.

RICHARD R. LAUS
Acting Director

For SEC use only
C329 (PSIC as reserved)
Stock Corporation
Less Than 5 Incorporators

DOCUMENTARY STAMP TAX PAID

2303

BIR FORM
2303
REVISED: APRIL 2019

REPUBLIKA NG PILIPINAS
KAGAWARAN NG PANANALAPI
KAWANIHAN NG RENTAS INTERNAS
REVENUE REGION NO. 004 - CITY OF SAN FERNANDO, PAMPANGA
REVENUE DISTRICT OFFICE NO. 21A - NORTH PAMPANGA

OCN: 21ARC20240000000053
Date OCN Generated: January 5, 2024

CERTIFICATE OF REGISTRATION

TIN & BRANCH CODE	NAME OF TAXPAYER		TIN ISSUANCE DATE
607-985-023-00000	WAYMAKER TECHNOLOGIES CORPORATION		April 22, 2022
REGISTERING OFFICE	x Head Office	Branch	
REGISTERED ADDRESS	BLK 3 LOT 5 ARAYAT BLVD. PAMPANG 2009 ANGELES CITY PAMPANGA PHILIPPINES		

TAX TYPES	FORM TYPES	FILING START DATE	FILING FREQUENCY	FILING DUE DATE
CORPORATE INCOME TAX	1702	January 1, 2023	ANNUALLY	On or before the 15th day of the 4th month following the close of the taxpayer's taxable year.
CORPORATE INCOME TAX	1702Q	July 1, 2022	QUARTERLY	Within sixty (60) days following the close of each of the first three (3) quarters of the taxable year.
REGISTRATION FEE	0605	January 1, 2023	ANNUALLY	On or before the last day of January.
VALUE ADDED TAX	2550Q	July 1, 2022	QUARTERLY	Not later than the 25th day following the close of each taxable quarter.
WITHHOLDING TAX - COMPENSATION	1601C	May 1, 2022	MONTHLY	On or before the 10th day of the month following the month when the withholding was made except for taxes withheld for December which shall be filed and paid/remitted on or before January 15 of the succeeding year.
WITHHOLDING TAX - COMPENSATION	1604C	January 1, 2023	ANNUALLY	On or before January 31 of the year following the calendar year in which the compensation payment and other income payments were paid or accrued.
WITHHOLDING TAX - EXPANDED/OTHERS	0619E	January 5, 2024	MONTHLY	On or before the 10th day of the month following the month in which withholding was made.
WITHHOLDING TAX - EXPANDED/OTHERS	1601EQ	January 5, 2024	QUARTERLY	Not later than the last day of the month following the close of the quarter during which withholding was made.
WITHHOLDING TAX - EXPANDED/OTHERS	1604E	January 1, 2025	ANNUALLY	On or before March 1 of the year following the calendar year in which the income payments subject to expanded withholding taxes or exempt from withholding tax were paid or accrued.

Page 1 of 2

BIR FORM
2303
REVISED: APRIL 2019

REPUBLIKA NG PILIPINAS
KAGAWARAN NG PANANALAPI
KAWANIHAN NG RENTAS INTERNAS
REVENUE REGION NO. 004 - CITY OF SAN FERNANDO, PAMPANGA
REVENUE DISTRICT OFFICE NO. 21A - NORTH PAMPANGA

OCN: 21ARC20240000000053
Date OCN Generated: January 5, 2024

CERTIFICATE OF REGISTRATION

TIN & BRANCH CODE	NAME OF TAXPAYER		TIN ISSUANCE DATE
607-985-023-00000	WAYMAKER TECHNOLOGIES CORPORATION		April 22, 2022
REGISTERING OFFICE	x Head Office	Branch	
REGISTERED ADDRESS	BLK 3 LOT 5 ARAYAT BLVD. PAMPANG 2009 ANGELES CITY PAMPANGA PHILIPPINES		

TAXPAYER TYPE/S	DOMESTIC CORPORATION

BUSINESS INFORMATION DETAILS			
		CATEGORY	REGISTRATION DATE
TRADE NAME 1	WAYMAKER TECHNOLOGIES CORPORATION		April 22, 2022
(PSIC)	32999-MANUFACTURE OF MISCELLANEOUS ARTICLES, N.E.C.	Primary	
Line of Business	MANUFACTURE OF MISCELLANEOUS ARTICLES, N.E.C.		

REMINDERS:
1. An annual registration fee shall be paid upon registration and every year thereafter on or before the last day of January, using BIR Form No. 0605.
2. Filing of required tax return/s to conform with the above tax types, whether with or without business operation, to avoid penalties.
3. For new business registrants, application for registration of manual Books of Accounts (B/As) shall be before the deadline for filing of the initial quarterly income tax return or annual income tax return whichever comes earlier, from the date of registration. Registration of new set of manual B/As shall be before its use.
4. Immediately inform the district office in case of transfer/cessation of business and other changes in registration information by filing BIR Form No. 1905.
5. For Self-Employed Individuals (SEI) whose gross sales and/or receipts and other non-operating income does not exceed P3,000,000 and who opted to avail of the 8% income tax rate, the tax type Percentage Tax (PT) shall not be reflected in the Certificate of Registration (COR). However, at the start of each taxable year, such SEI shall be automatically subjected to graduated income tax rates and required to file quarterly percentage tax return (BIR Form No. 2551Q) and option to replace the COR to reflect "PT", unless qualified and opted to avail of the 8% income tax rate annually.

02819300

I hereby certify that the above named person is registered as indicated above, under the provision of the National Internal Revenue Code, as amended.

ELAINE D. CRUZ
Chief, Client Support Section
TIN 131-883-121-000

CHARMAINE C. DE LA TORRE
REVENUE DISTRICT OFFICER
(Signature over Printed Name)

THIS CERTIFICATE MUST BE EXHIBITED CONSPICUOUSLY IN THE PLACE OF BUSINESS.

Page 2 of 2

www.waymakertechnologies.net

CONTACT US

Blk 3 Lot 5 Arayat Blvd, Pampang, Angeles City,
Pampanga, Philippines

0917 870 0226
0917 100 1540

info@waymakertechnologies.net
michael@waymakertechnologies. net

WAYMAKER

WAYMAKER TECHNOLOGIES CORPORATION

WE ARE A KINGDOM BUSINESS



PRODUCT PARTNERS

LUMINOR BLACKCOMB Series

the Spirit THINK

SI

ELFI SELF CLEANING FILTERS